REVISIONS						
ECO	REV	DESCRIPTION	REVD	DATE	CKD	DATE
-	01	INITIAL RELEASE	BJS	4/6/2020	DBS	4/6/2020
5511	A	ADDED TEXT INSTRUCTIONS, RELEASE TO PROD.	DBS	1/11/2021	BJS	1/11/2021

-BININ+ TO BININ- VOLTAGE RANGE +12 TO +28 VDC, INPUTS SHALL BE REVERSE POLARITY PROTECTED TO 40V
-THE MAXIMUM LOAD FOR THE ALARM PORTS IS 30 VDC AT 1.0A
-THE MAXIMUM 4-20 mA LOAD IS 600 OHMS

-INSULATED WIRE (14-20 AMERICAN WIRE GAUGE, RATED TO 300 VOLTS)
FOR AC POWER CONDUIT

-USE EXTERNAL CIRCUIT BREAKER OR SWITCH THAT DISCONNECTS BOTH
POLES OF THE SUPPLY VOLTAGE, RATE APPROPRIATELY (OPTION)

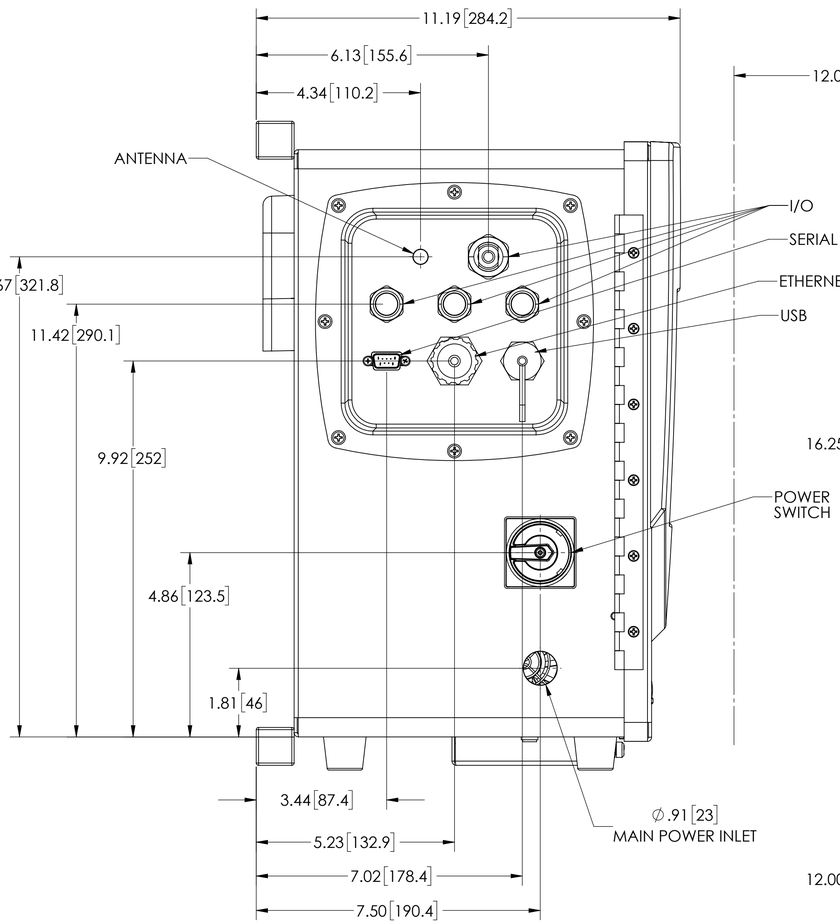

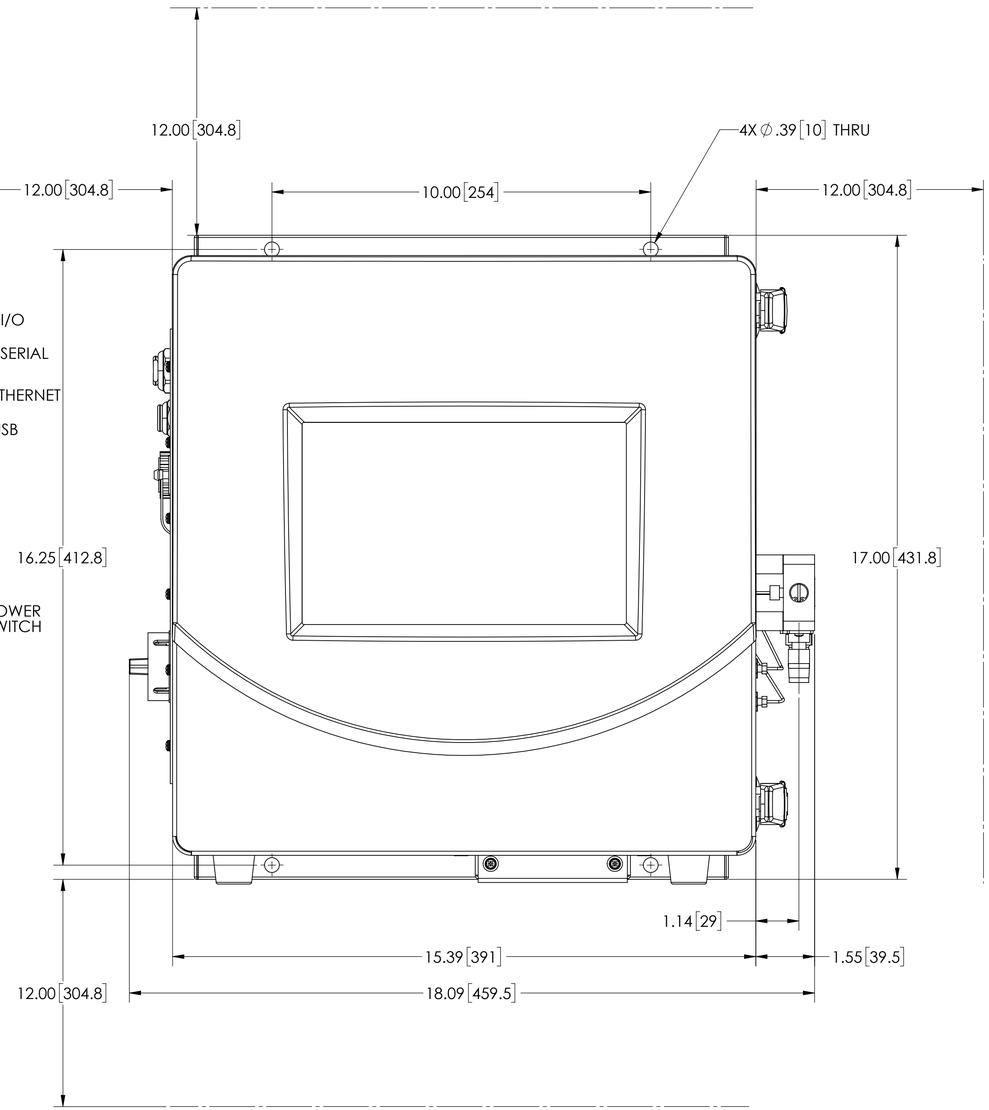

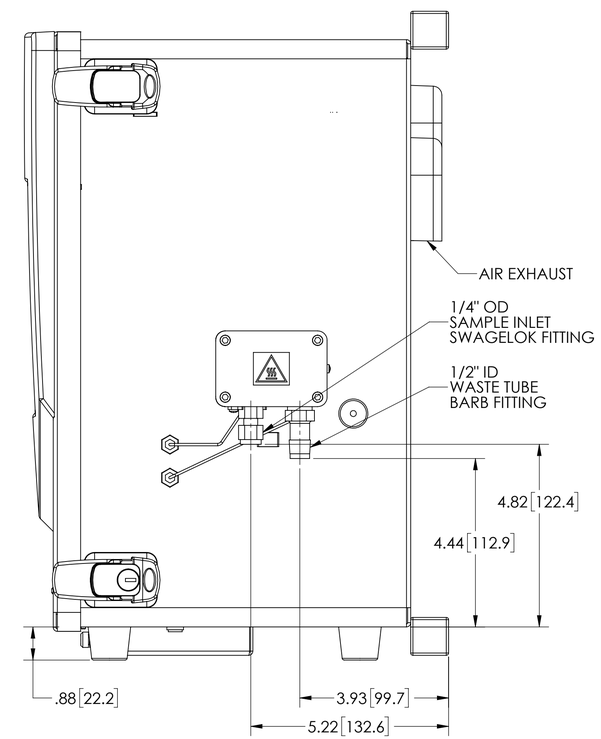

MOUNTING INSTRUCTIONS

INSTALL MOUNTING BOLTS CAPABLE OF SUPPORTING 120LB [54.4KG]
DO NOT MOUNT IN DIRECT SUNLIGHT OR TEMPERATURES GREATER THAN 40C OR BELOW 5C
ALL DIMENSIONS ARE IN INCHES [MILLIMETERS]
12 [305] CLEARANCES RECOMMENDED ON TOP, BOTTOM, LEFT AND RIGHT OF INSTRUMENT
FRONT DOOR SHOULD HAVE ADEQUATE CLEARANCE TO SWING OPEN GREATER THAN 90 DEGREES
INSTRUMENT MAY BE DIRECTLY BOLTED TO A WALL; ADEQUATE CLEARANCE IS PROVIDED BY SQUARE TUBING

CONFIDENTIAL:
INFORMATION CONTAINED HEREIN IS THE PROPERTY OF SIEVERS®, IS CONFIDENTIAL, IS NOT TO BE REPRODUCED, AND IS TO BE RETURNED UPON DEMAND.

UNLESS OTHERWISE SPECIFIED
DIMENSIONS ARE IN INCHES
TOLERANCES ARE:
.X ± .1
.XX ± .02
.XXX ± .005
ANGLES ± 1°
FINISH 63 RMS

GD&T PER ANSI/ASME Y14.5M-1994

DO NOT SCALE DRAWING

Sievers®
Analytical Instruments
6060 Spine Road Boulder, CO 80301 T(303) 444-2009 F(303) 444-9543

TITLE: **M500, SAMPLE BLOCK, INSTALLATION DWG**

SCALE:			SHEET:
1:2			1 OF 1
SIZE: D	DRAWN: Darren Smith	DATE: 1/13/2021	PART NUMBER: DIN 78420-01	REV: A